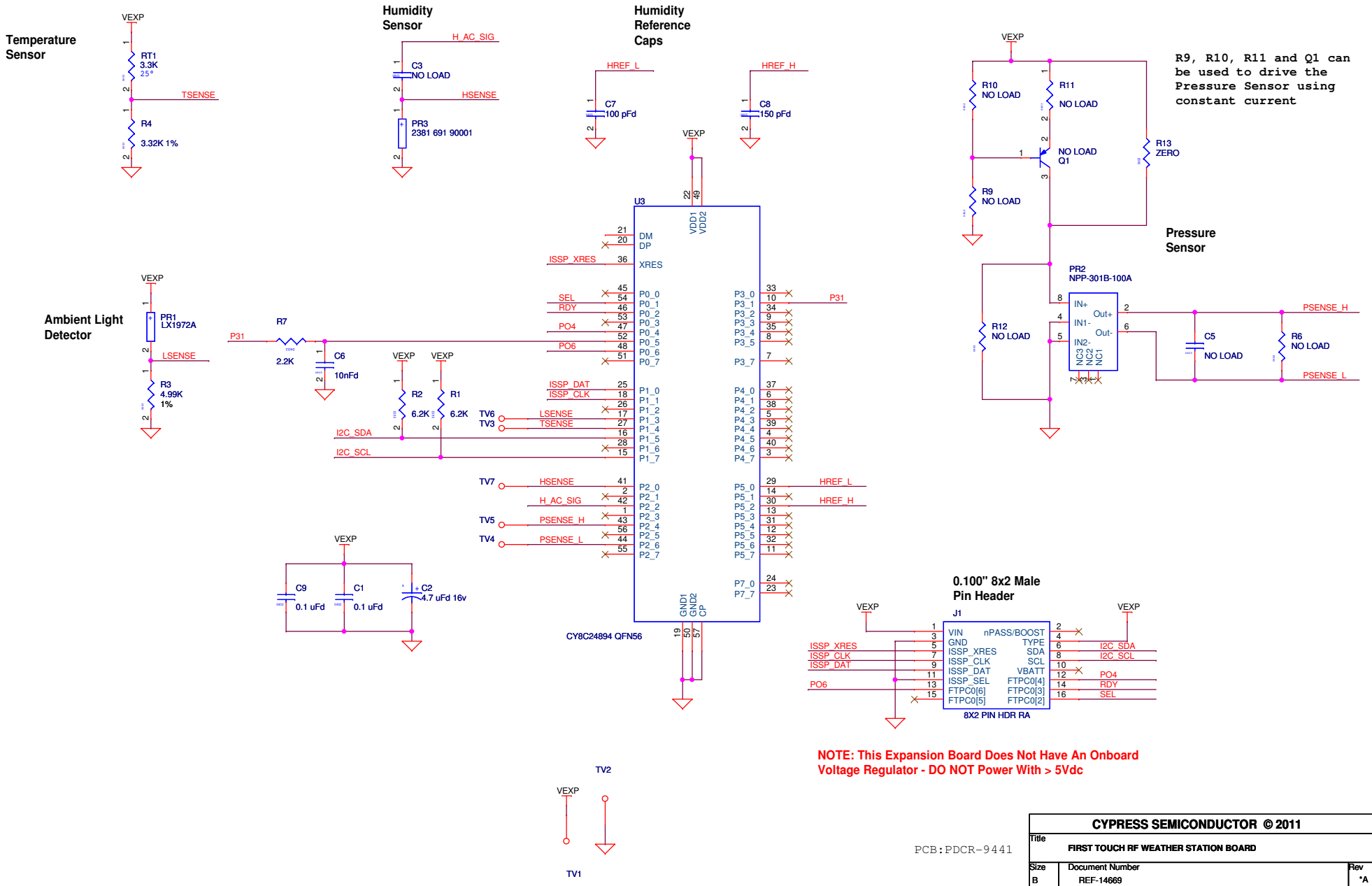

PCB:PDCR-9441

CYPRESS SEMICONDUCTOR © 2011		
Title: FIRST TOUCH RF WEATHER STATION BOARD		
Size: B	Document Number: REF-14669	Rev: *A
Date: Friday, April 15, 2011	Sheet 1 of 6	